CH1 Electric cylinder

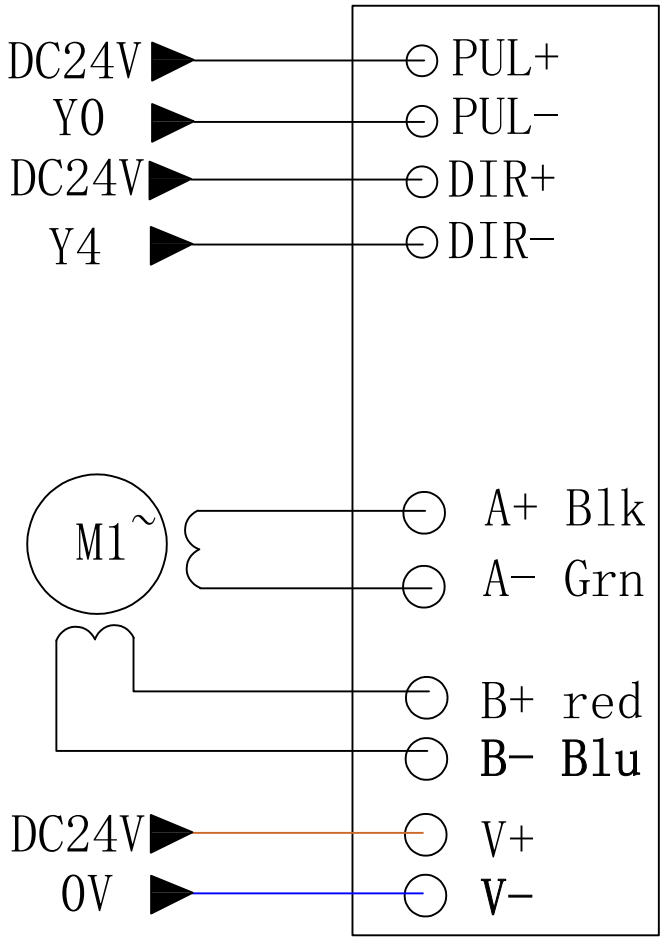

CH2 Electric cylinder

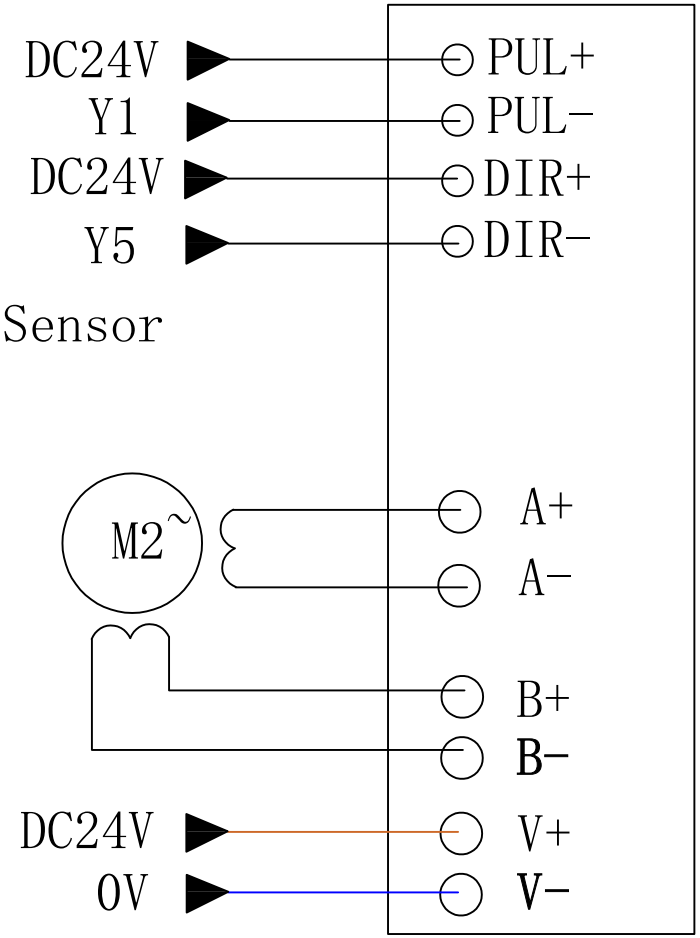

Pressure Sensor

Red: E+

Blk: E−

Yel: SHD

Grn: S+

Wht: S−

No.	Err.	Date

Hdr	Offline F-Type Desktop Single-Unit Dual-Channel		LingLong Airtight technology	
Plot Qi	Audit Qi	Pub 1	Cust	LL
Date 2024/08/14	Date 2024/08/14	Date 2024/08/14	Pg 2/2	Lang EN/英